DO NOT SCALE

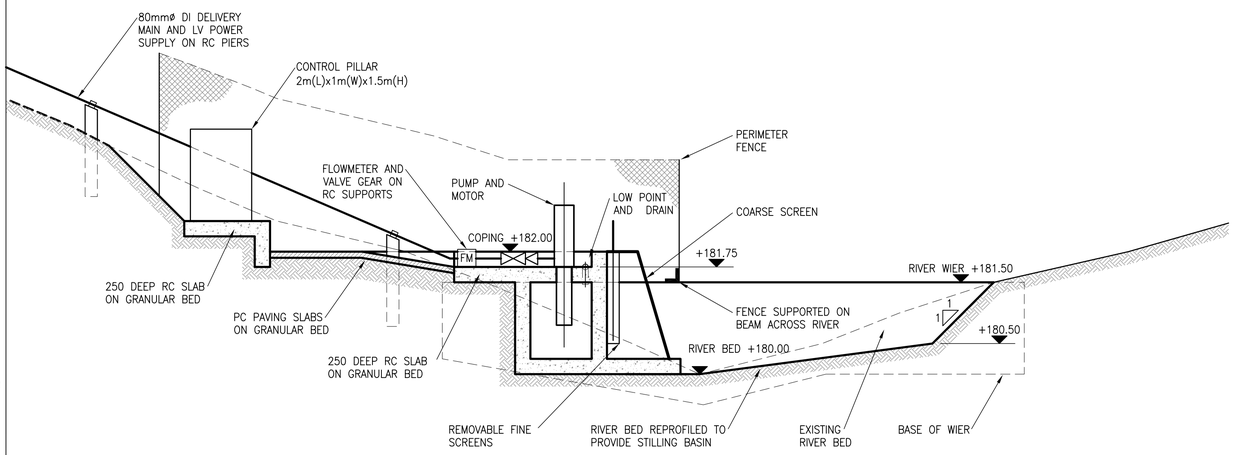

SECTION A–A
SCALE 1:50

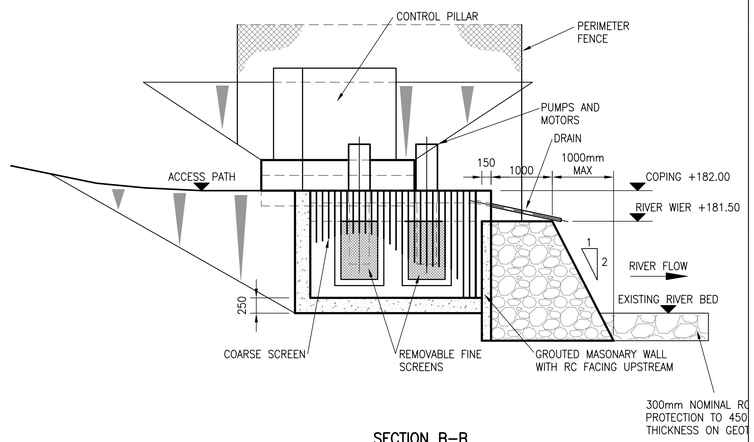

SECTION B–B
SCALE 1:50

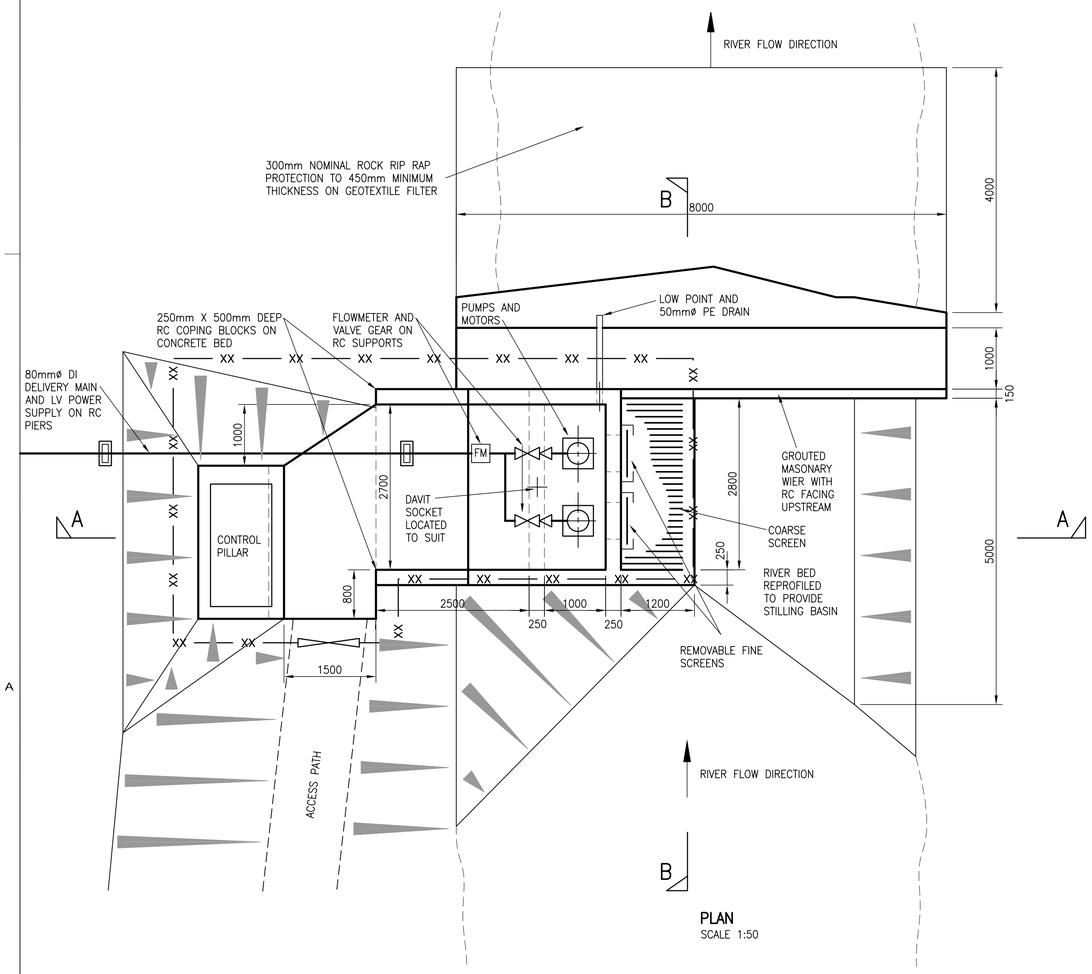

PLAN
SCALE 1:50

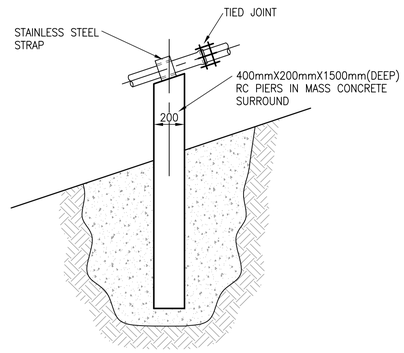

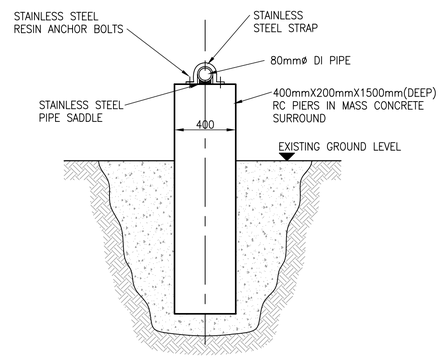

TYPICAL DELIVERY MAIN SUPPORT
SCALE 1:20

0 10 Millimetres 150

COMMERCIAL IN CONFIDENCE

NOTES:

1. DIMENSIONS ARE IN MILLIMETERS UNLESS OTHERWISE STATED.
2. REFERENCE DESIGN DRAWINGS TO BE READ IN CONJUNCTION WITH EMPLOYER'S REQUIREMENTS AND REFERENCE DESIGN SPECIFICATIONS.
3. BACKGROUND SURVEY MAPPING BASED ON ORDANANCE SURVEY MAPPING SERIES G893 (D.O.S 260) SHEETS 3 & 6 AND TRITAN SURVEYS 2006.
4. CO–ORDINATES ARE TO ST HELENA LOCAL GRID.
5. LAND LEVELS ARE RELATIVE TO MEAN SEA LEVEL.
6. SPECIFIED PRODUCTS SHALL BE OR EQUAL APPROVED.
7. CONCRETE GRADES TO BS8500
   REINFORCED CONCRETE GRADE: RC40
   MASS CONCRETE GRADE: GEN3
   BLINDING CONCRETE GRADE: GEN1
8. HIGH YIELD REINFORCEMENT WITH YIELD STRENGTH OF 460N/mm².

DRAWING REFERENCES:

5048976–CI–01–1045
5048976–CI–01–1047
5048976–CI–01–2075

LEGEND

—— XX ——	2.0m HIGH GENERAL SECURITY FENCE
RC	REINFORCED CONCRETE
ID	INSIDE DIAMETER
OD	OUTSIDE DIAMETER
DI	DUCTILE IRON
PE	POLYETHYLENE
SDR	STANDARD DIMENSION RATIO
PRV	PRESSURE REDUCING VALVE
TWL	TOP WATER LEVEL

Rev.	Description	By	Date	Chk'd	Auth
B	MINOR REVISIONS. ISSUED FOR TENDER	KT	2.5.07	TJM	RDJ
A	NOTES REVISED	KT	05.03.07	RDJ	RDJ

Code	Purpose of issue	Rev	Date	Authorised
	Tender	A	05.03.07	RDJ
	Pricing and Review	-	26.01.07	RDJ

Client
DFID

Consultant
Atkins Limited ©
Consulting Engineers,
Woodcote Grove,
Ashley Road,
Epsom, Surrey, England,
KT18 5BW
ATKINS
www : http://www.atkinsglobal.com
Fax (01372) 740055
Tel. (01372) 726140

Project
St Helena Reference Design

Title
Water Intake Structure

Scale at A1	Drawn	Checked	Authorised	Status
As Shown	WMS 22.01.07	KWH 22.01.07	RDJ 26.01.07	T

Drawing Number: 5048976 - CI - 01 - 1046
Rev: B

P:\GBEMF\Civil Infrastructure\Jobs\5048976 – ST HELENA REF DESIGN\09 Draw out\01 –Site\Home\Clout\5048976–CI–01–1046.dwg
May 02, 2007 – 11:30am